lockers.com
1-800-LOCKERS

Visit us at: www.lockers.com

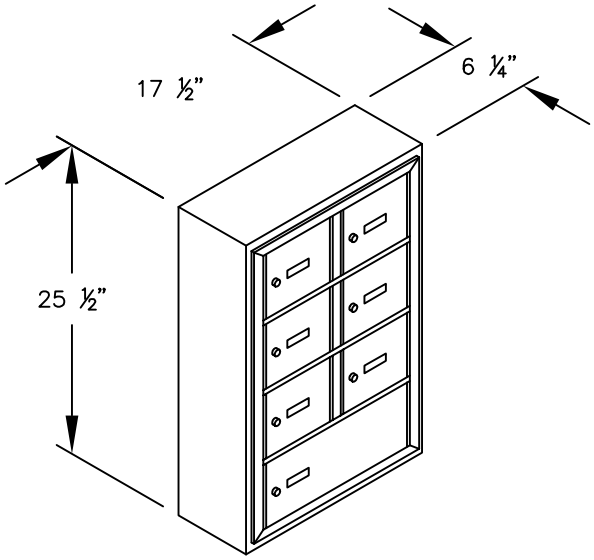

MODEL #19045–07

SURFACE MOUNTED
MASTER KEYED LOCKS
(6) 'A' DOORS – 5" DEEP COMPARTMENTS
(1) 'B' DOOR – 5" DEEP COMPARTMENT

MODEL #19045–07

CELL PHONE LOCKER

SURFACE MOUNTED
MASTER KEYED LOCKS
5" DEEP COMPARTMENTS

AVAILABLE FINISHES:
ALUMINUM, BRONZE, GOLD, SANDSTONE

DRAWN: 06/13

Established in 1936, Salsbury Industries is the industry leader in manufacturing and distributing quality lockers and storage solutions.

SALSBURY INDUSTRIES
People Committed to Quality Since 1936®

1010 E. 62ND STREET
LOS ANGELES, CA 90001
PHONE: (800) 562–5377
FAX: (800) 562–5399
email: engineering@lockers.com